ISSN 2229-5518

Modification of DRI Product Cooler to Improve the Cold DRI Production Rate Using TQM Tools

Dr. C Thotappa, Siddaram Reddy, Rajan Chola

Abstract— This paper focuses on improving cold direct reduced iron (CDRI) production rate. Product Cooler vessel in the CDRI route cools the DRI produced in the Furnace from 600ºC to atmospheric temperature. Due to insufficient cooling of DRI in Product Cooler, hot product is discharged on the belt conveyor causing damage to conveyor belt, oxidizing of the DRI to remet (DRI of low metallization) Safety concern due to fire incidents and productivity losses. Hence to improve the efficiency of CDRI production trough existing product cooler TQM tools like cause and effect diagram and scatter plot have been applied for analyzing the root cause of hot product through product cooler and implement the best possible solutions. Results of analysis indicate the need for modification of product cooler to increase the cooling efficiency which in turn leads to increase in production rate.

Index Terms— Direct Reduced Iron(DRI),Product cooler, Cooling gas, Cold Direct Reduced Iron (CDRI) ,Cause and Effect diagram, Scatter Plot, Off- take temperature, Hot Direct Reduced Iron(HDRI), Bustle Gas.

1. INTRODUCTION

1.1 Product Cooler

The furnace discharge leg feeds material directly into the product cooler through the furnace product diverter (FPD) and the product cooler feed leg as shown in the following figure 1.1

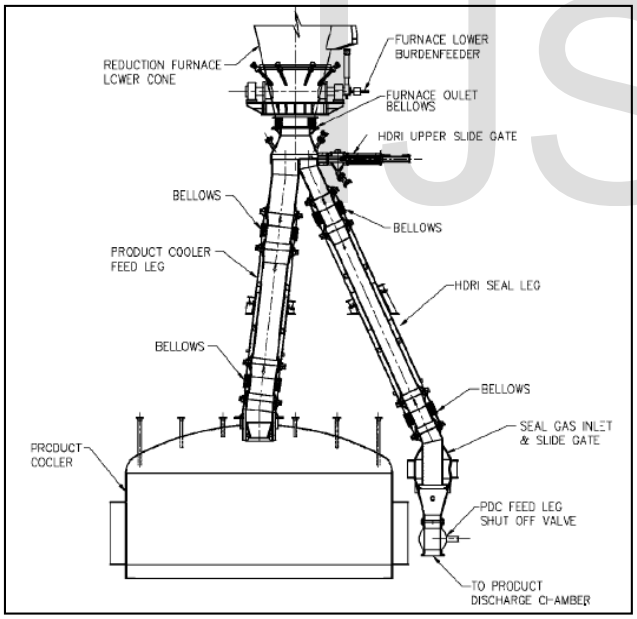

Fig 1.1: Furnace Product Diverter

The product cooler is connected directly to the furnace lower discharge leg and is full of DRI at all times. The product cooler is designed to cool hot reduced material from the furnace to less than 60 °C before it is discharged to conveyors for transport to the storage facilities. The product cooler is designed very much like the cooling zone of the standard MIDREX Plant (cold discharge). It resembles the lower cone of the furnace but is an external unit with a domed roof. Incorporated into the roof is the product cooler feedleg, two cooling gas off- takes, gas sampling device, and nozzles for three sets of thermowells. Also located in the cooler are two sets of burdenfeeders (middle burdenfeeders and a lower burdenfeeder). The cooling gas bustle and distributor is located above the middle burdenfeeders as shown in figure 1.2 below.

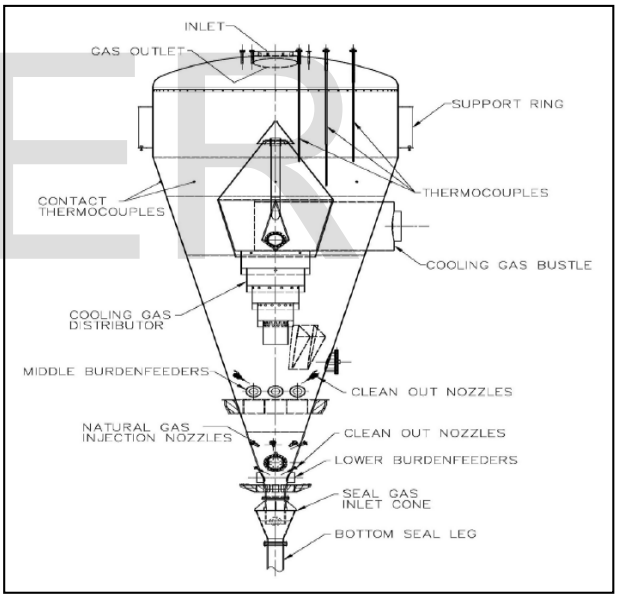

Fig 1.2: Product Cooler Vessel

1.2 Cooling Gas Distributor

The cooling gas distributor is located in the center of the product cooler just above the middle burden feeders as shown in above fig 1.2. It forms a uniform annulus between the walls of the furnace and the distributor to evenly distribute the cooling gas. These orifices are sized for a relatively high pressure drop compared to the pressure drop through the bed, ensuring an even distribution of cooling gas. A smaller pipe injects cooling gas upwards into

the center of the bed to ensure even cooling of the product. The cooling gas distributor as shown in fig below also acts as a flow aid device to ensure mass flow. The distributor slows material flow in the center of the cooler and increases material flow along the cooler walls.

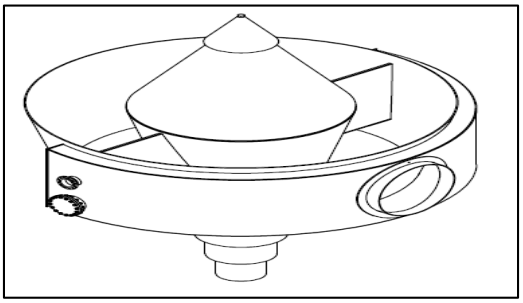

Fig 1.3: Gas Distribution Assembly

1.3 Cooling Gas Circuit

In the DR Shaft Furnace oxide feed material is converted to DRI as described before. After passing the furnace the DRI enters the cooling zone (Product Cooler). In the Product Cooler the hot reduced iron is cooled down by counter flow contact with the recycled cooling gas to prevent rapid re-oxidation and to facilitate handling and storage. The product is discharged at a controlled rate by a vibration feeder after passing the lower dynamic seal leg. The hot, dust-laden cooling gas leaves the Product Cooler at an elevated temperature through the Cooling Gas Offtakes and is scrubbed and cooled in the cooling gas scrubber. After compression it is recycled to the DR Furnace and there fed to the cooling zone via the cooling gas distributor.

Table 1.1: Typical Cooling Gas composition

Constituent	Volume%
CO	16.0
CO_2	3.0
H2	38.0
H2O	5.0
N2	34.0
CH	4 6.0

Cooling Gas circuit consists of following equipments:

- Cooling Gas Scrubber (CGS)
- Cooling Gas Compressor (CGC)
- Cooling Gas After Cooler (CGAC)
- Cooling Gas Mist Eliminator (CGME)

2 PROBLEM IDENTIFICATION

- DRI plant has been designed to produce 127 tons per hour of HDRI along with 20 tons per hour of CDRI.
- CDRI route has also been designed to handle 147 tons per hour in case of non availability of HDRI route. However since commissioning of DRI plant, CDRI route has been unable to handle more than 60 tons per hour, even for short intervals, thus forcing us to reduce production rate in case of non availability of HDRI route.
- Product Cooler vessel in the CDRI route cools the DRI produced in the Furnace from 600°C to atmospheric temperature. Due to insufficient cooling of DRI in Product Cooler, hot product is discharged on the belt conveyor causing damage to conveyor belt
- Oxidizing of the DRI to remet (DRI of low metallization)
- Safety concern due to fire incidents
- Reduction of pellets using Corex Gas and Coke Oven Gas, produces DRI, which is then diverted into two routes:
    - to SMS3 for immediate consumption, and
    - to Product Cooler for cooling and passivation for later use. Insufficient cooling in product Cooler leads to Hot Product which incurs Productivity losses.
- Due to this more than 150 tons of Hot Product has been generated every week.Net hot product generated was 7500 tons per year and the loss incurred was 1.8 crores.

3 METHODOLOGY

3.1 Analysis by Cause and Effect Diagram

Brainstorming was done with team members to list down probable causes for the hot product generation. Then it is put in the form of cause and effect diagram as shown below in figure 3.1.

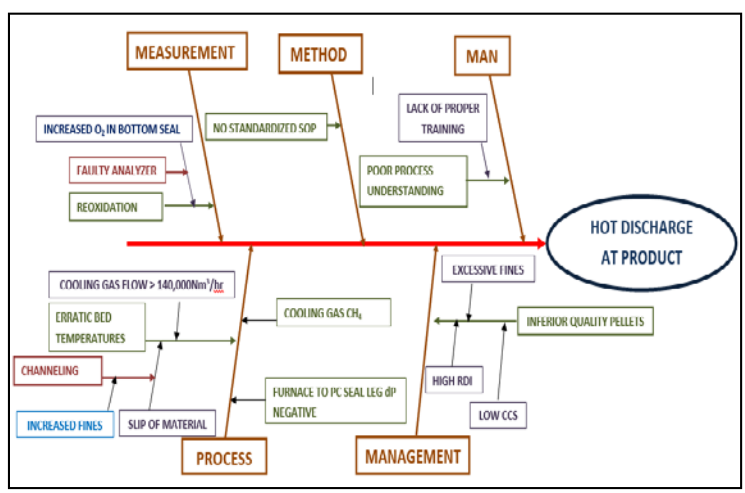

Fig 3.1: Cause and Effect Diagram

The reason H2 and CH4 are used for stabilization of furnace reaction temperatures and as cooling agent in the product cooler is because when H2 undergoes oxidation reactions and CH4 undergoes cracking reactions, the ambient temperature decreases as a result of endothermic reactions as shown below

$H2 + (1/2)\ O2 \longrightarrow H2O\ \Delta H^{o}298K = -286\ kJ/mole$

$$CH_4 \rightarrow C + 2H_2 \quad \Delta H^0_{298\,K} = 75\ kJ/mol,$$
$$C + \tfrac{1}{2}O_2 \rightarrow CO \quad \Delta H^0_{298\,K} = -111\ kJ/mol,$$
$$C + O_2 \rightarrow CO_2 \quad \Delta H^0_{298\,K} = -283\ kJ/mol.$$

Table 3.1: Cause Analysis Table

SL. NO	CAUSE (Description)	Is there any Spec?	If yes, what is the spec?	What is the basis?	Is Checked Frequently?	Is there any difference	Action Plan	Responsibility	Target Date
1	Cooling Gas CH_4	YES	18%	Every time the production rate of CDRI is changed	YES	YES	WHY-WHY ANALYSIS	Mr. Ashutosh	Continuous
2	Bustle Gas CH_4	YES	1.5%	Every time the production rate is changed	YES	NO	FURTHER ANALYSIS	Mr. Ashutosh	Continuous
3	ΔP between furnace and Product Cooler seal leg should be positive	YES	>0.1 bar		YES	NO	SOLVED	Mr. Shambu	Continuous
4	Difference in Off-take temperatures	NO	-	~0°C	NO	-	START CHECKING	Mr. Manjunatha	
5	HDRI/CDRI RATIO	YES	7/3	Demand of SMS3	YES	YES	To comply with specs of SMS3	Mr. Reddi Prasad	Continuous
6	Flow of CG	YES	>140,000 Nm^3/hr	Discharge of CDRI from PC	YES	NO	THIS IS NOT CAUSE	Mr. Ashutosh	-
7	Channeling of CG inside PC	NO	-	Difference in Off-take temperatures	YES	YES	WHY-WHY ANALYSIS	Mr. Siddaram Reddy	-
8	Low CCS of incoming pellets	YES	>260	Generation of fines	YES	-	-	Mr. Ramakantha	-
9	Poor RDI of supplied pellets	YES		YES	YES	NO	THIS IS NOT CAUSE	Mr. Ramakantha	

3.2 List of Possible Solutions

S. No.	Probable Causes	Possible solutions
	Cooling gas CH_4	1.1 Increasing flow of Coke Oven Gas in cooling gas circuit.
		1.2 Introducing center plate in China Hat.
		1.3 Keeping CDRI Production below 40 tons per hour to optimize cooling.
		1.4 Introducing baffles in Product Cooler to increase cooling effectiveness of Cooling gas.
		1.5 Increasing volume of Product Cooler.
		1.6 Introducing nozzle plate in product Cooler to facilitate additional cooling in secondary phase.
	Bustle Gas CH_4	2.1 Merging Corex gas line with Coke oven gas line at gas take-over point for optimum use of reducing gases.
		2.2 Keeping total DRI Production constant to compensate for incoming sources of variation in composition in the Corex and Coke oven gases.
	Off-take temperatures	3.1 Introducing center plate in China Hat.
		3.2 Introducing baffles in Product Cooler to increase effectiveness of Cooling gas.

3.3 Solution Selection Matrix

	Sigma impact	Time impact	Cost/ benefit impact	Evaluation criteria
	10	8	6	Importance
Validated Cause	Correlation of solution to criteria			-Total -
Increasing flow of Coke Oven Gas in cooling gas circuit.	5	3	1	80
Introducing center plate in	10	6	6	154

China Hat.				
Keeping CDRI Production below 40 tons per hour to optimize cooling.	2	3	3	62
Introducing baffles in Product Cooler to increase cooling effectiveness of Cooling gas.	10	8	6	200
Increasing volume of Product Cooler.	8	2	4	120
Introducing nozzle plate in Product Cooler to facilitate additional cooling in secondary phase.	9	7	6	182
Merging Corex gas line with Coke oven gas line at gas take-over point for optimum use of reducing gases.	8	1	1	94
Keeping total DRI Production constant to compensate for incoming sources of variation in composition in the Corex and Coke oven gases.	2	6	1	74

Top 3 solutions have been selected for implementation

3.4 Modification of Product Cooler

Presence of hot spots is very evident in this part of the product cooler. The thermography results proved that there was uneven distribution of heat. As can be seen from the results, there is no uniformity in distribution of heat. Thus, the decision to opt for an infrastructure improvement project was taken. The cooling of Hot DRI takes place in counter flow direction and 3 step modifications is implemented to improve cooling efficiency of Product Cooler so as to achieve uninterrupted product in full capacity.

The 3 stages of modification include:

1. Baffle plate introduction- for better circulation of cooling gas, increasing its cooling effectiveness and minimizing its channeling.

2. China hat modification to cool down innermost material.

3. Introduction of additional bustle at lower end of Product Cooler for second stage cooling.

Stage 1: Introduction of Baffle Plates

16 number of baffle plates are introduced inside the upper cylindrical portion of the product cooler as shown in the below. The introduction of baffle plates in the cylindrical portion of product cooler will increase the cooling effectiveness of primary cooling gas, which will improve gas flow trajectory for better cooling or heat transfer. Material of construction (MOC) of the baffle plates is SS310, as it can withstand higher temperature. The whole activity is done during plant shutdown for the period of 10 days.

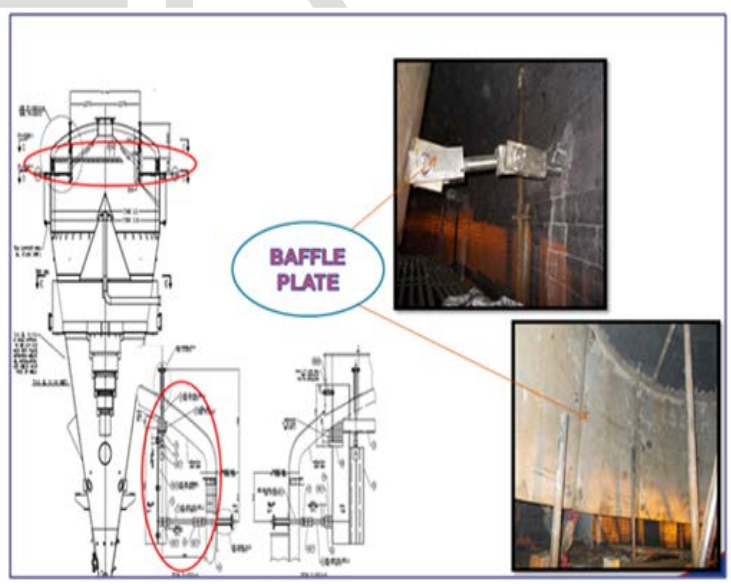

Fig 3.2: Baffle plates inside Product Cooler

Stage 2: Modification in China Hat

To cool the innermost material of product cooler in the existing China Hat another nozzle provision was made to

add additional cooling gas line as shown in following fig 3.3.

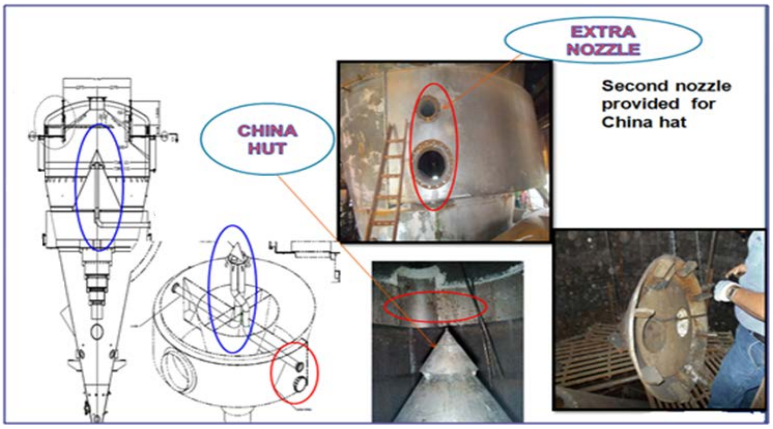

Fig 3.3: China Hat Modification

Stage 3: Additional Bustle Pipe

Additional bustle pipe taken from the primary cooling gas ciruit is connected to the conical portion of the product cooler.Bustle distributed with 8 numbers of nozzle of sizes 250 mm dia throught the circumferewnce .Which will facilitate addition cooling in the seconadry phase, which will obviously increase the the flow direction of cooling gas inside the product cooler and ther by increases the heat transfer.

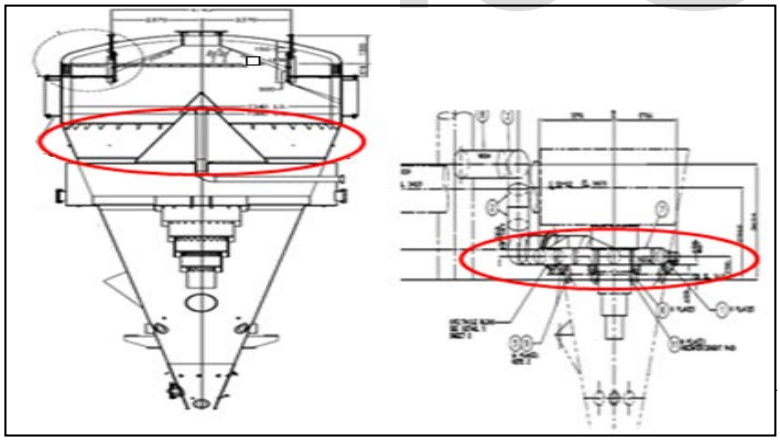

Fig 3.4: Design showing additional bustle for Cooling in Secondary Phase

4 RESULTS

4.1 Flow of Cooling Gas before and after Modification

Flow of cooling gas inside product cooler before and after modification is shown in the following Fig 4.1 and Fig 4.2 respectively. After comparing both the figures it can seen that the area of flow of cooling gas has increased tremendously, thereby increasing cooling effect.

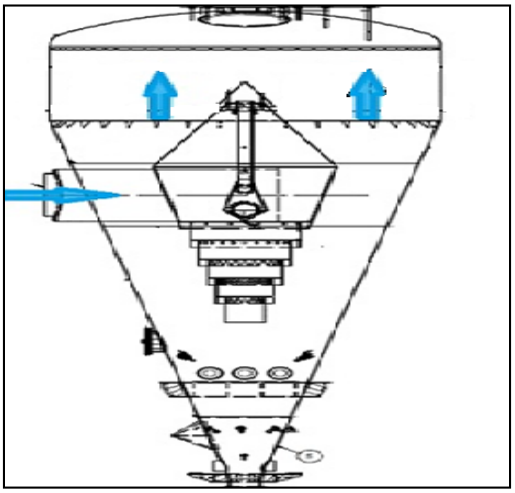

Fig 4.1: Cooling Gas Flow before modification

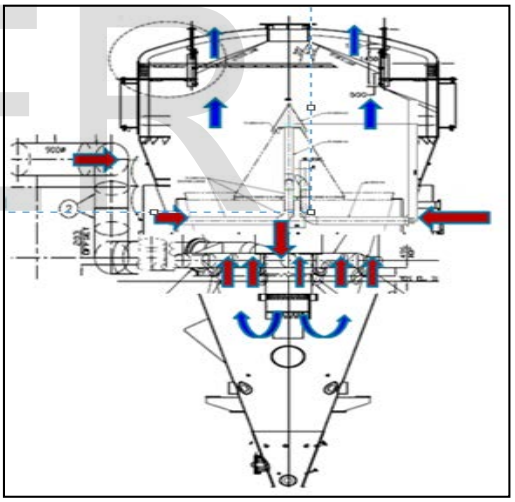

Fig 4.2: Cooling Gas Flow after modification

Off-take temperatures are the degree of hotness of the gas coming out of the product cooler. There are two exit gas lines in the product cooler, hence two off-take temperatures. Higher the average of the off-take temperatures, higher is the exchange of heat occurred inside of the product cooler, lower is the discharge temperature of CDRI from the product cooler, hence decreasing the probability of hot product generation. Thus, keeping the inlet temperatures of the cooling gases constant at 45 Deg C, aim is to achieve as high average temperatures as possible.

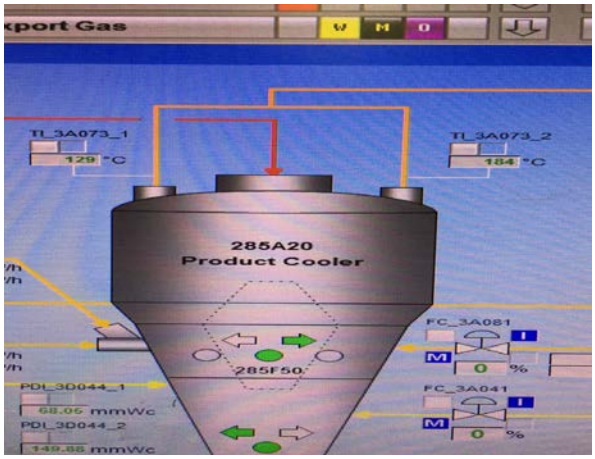

Fig 4.3: Off take temperature after modification

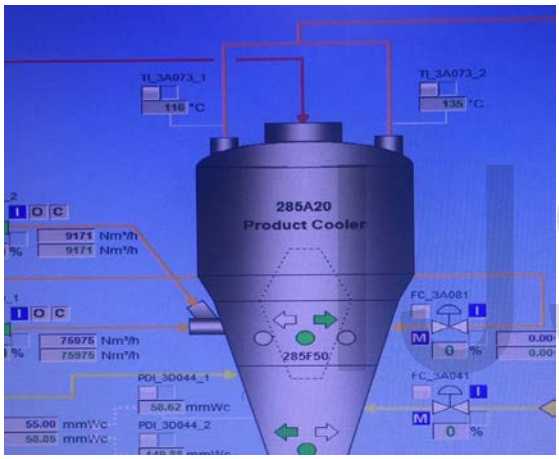

Fig 4.4: Off take temperature before modification

4.2 Trend of Hot CDRI Product across the Timeline

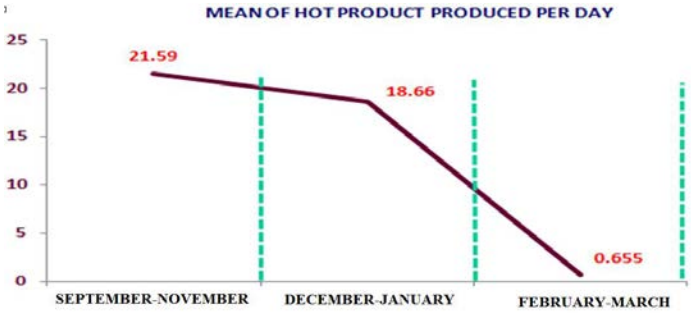

Fig 4.5 : Mean of hot product produced per day

It can be seen from the graph that, mean hot DRI production shifted from 21.59 tons to 0.655 tons per day after product cooler modification.

4.3 Financial Benefits

The benefits achieved as a result of Product Cooler modification reduced Hot CDRI Product generation by a huge margin, i.e. by 97%.

Table 4.1: Cost Matrix

Total Saving	3.9 Cr
Investment for modification	1.08 Cr
Savings after Investment	2.82 Cr

5 CONCLUSION AND FUTURE SCOPE

- Problem of hot discharge analyzed using TQM tools like cause and effect diagram and scatter plot and solutions have been listed out with their impact and most appropriate solution have been implemented.
- The efficiency of CDRI production is improved by
  a) Introducing Baffle plate for better circulation of cooling gas, increasing its effectiveness and minimizing its channeling in the existing product cooler.
  b) Modifying China hat to cool down innermost material.
  c) Introduction of additional bustle at lower end of Product Cooler for second stage cooling.
- Adding another cooling gas compressor in the cooling gas circuit to operate the plant with more than designed capacity increases the cooling efficiency by increasing the cooling gas flow to the product cooler, or to increase the production rate to accommodate the modification made in the product cooler we can replace the existing cooling gas compressor with higher capacity.

REFERENCES

[1] Hamzeh Hamadeh, Olivier Mirgaux and Fabrice Patisson "Detailed Modeling of the Direct Reduction of Iron Ore in a Shaft Furnace" , 1 October 2018 , Materials 2018, 11, 1865; doi:10.3390/ma11101865.

[2] B Alamsari, S. Torii, A. Trianto, and Y. Bindar "Numerical Simulation of Iron Ore Reactor Isobaric and Cooling zone to Investigate Total Carbon Formation in Sponge Iron" ,International Journal of Materials and Metallurgical Engineering ,Vol:3, No:5, 2009, ISNI:0000000091950263.

[3] Shengyi He, Haoyan Sun, Chaoquan Hu, Jun Li, Qingshan Zhu Hongzhong Li "Reduction of fine iron ore concentrate in a conical fluidized bed", Published by Elsevier B.V , http://dx.doi.org/10.1016/j.powtec.2017.03.007, Available online 06 March 2017.

[4] Bayu Alamsari, Shuichi Torii, Azis Trianto, and Yazid Bindar " Heat and Mass Transfer in Reduction Zone of Sponge Iron Reactor", ISRN Mechanical Engineering Volume 2011, Article ID 324659, doi:10.5402/2011/324659.

[5] Ghazi Abu Taher & Md. Jahangir Alam "Improving Quality and Productivity in Manufacturing Process by using Quality Control Chart and Statistical Process Control Including Sampling and Six Sigma",Global Journal of Researches in Engineering: G Industrial Engineering Volume 14 Issue 3 Version 1.0 Year 2014, Online ISSN: 2249-4596 & Print ISSN: 0975-5861

[6] Tomohiro Akiyama, Reijiro Takahashi And Jun-Ichiro YAG "Measurements of Heat Transfer coefficients between Gas and Particles for a single Sphere and for Moving Beds", ISIJ International, Vol. 33 (1993), No. 6, pp. 703-710

[7] Mirzajani, H. Ale Ebrahim and S.M.M. Nouri "Simulation of a Direct Reduction Moving Bed Reactor Using A Three Interface Model" , Brazilian Journal of Chemical Engineering, Vol. 35, No. 03, pp. 1019-1028, July - September, 2018 , dx.doi.org/10.1590/0104-6632.20180353s20170178

- *Siddaram Reddy is currently pursuing masters degree program in Production Management in RYMEC, Ballari, Karnataka, India PH-9480694742. E-mail: siddaramreddy @gmail.com*
- *Dr. C.Thotappa is currently working as professor in Mechanical department,RYMEC,Ballari,Karnataka, India, PH- 9342612381 .E-mail: thotappa@gmail.com*
- *Rajan Chola is currently working as DGM Operations in JSW Steel Ltd.,Toranagallu,Ballari,Karnataka , India, PH- 9480694558 . E-mail: rajan.chola@jsw.in*